Scotsman®
Ice Systems

Installation and User's Manual for Remote Low Side Modular Flake Ice Machine **Prodigy Plus A Series** Model with R449A **FS2330LX**

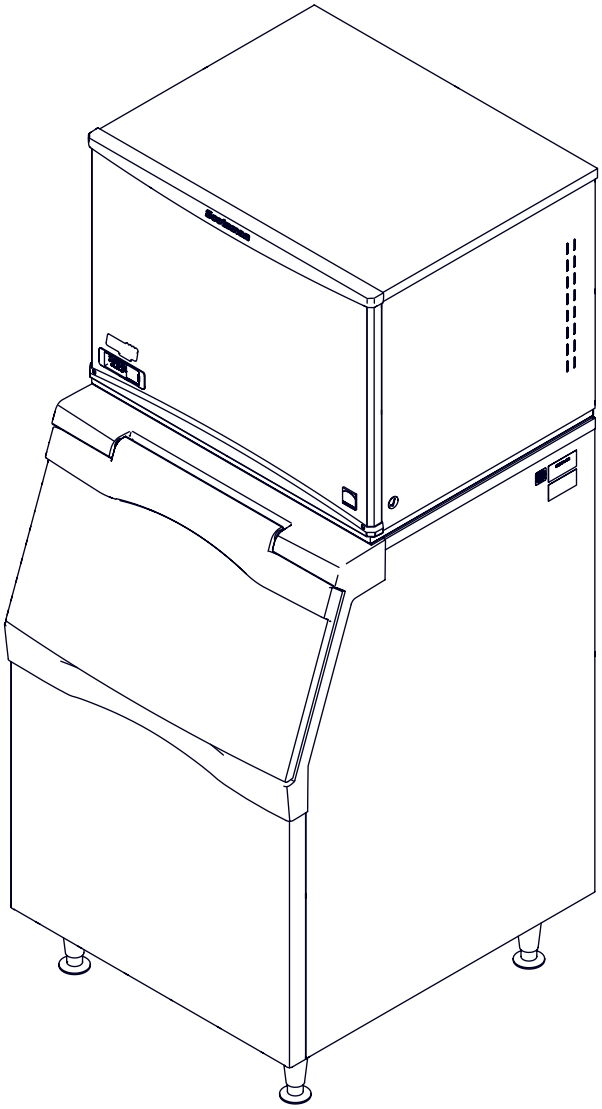

FS2330LX
Remote Low Side User Manual
Introduction

This ice machine is the result of years of experience with flaked and Scotsman Nugget Ice® ice machines. The latest in electronics has been coupled with the time tested Scotsman flaked ice system to provide reliable ice making and the features needed by customers. The features include simple conductivity water level sensing, evaporator clearing at shut down, photo-eye sensing bin control and the ability to add options.

Contents

Installation: Page2

Location: Page3

Cabinet Layout Page4

Unpacking & Install Prep Page5

Water Page6

Electrical Page7

Refrigeration Page8

Final Check List Page9

Initial Start Up and Maintenance Page10

Maintenance: Scale Removal and Sanitation Page11

Maintenance: Sensors Page12

Options Page13

What to Do Before Calling for Service Page14

WARNING: Cancer and Reproductive Harm
www.P65Warnings.ca.gov

This machine is designed to be used indoors, in a controlled environment. Operation outside the limits listed here will void the warranty.

Air temperature limits

	Minimum	Maximum
Ice maker	50°F.	100°F.
Remote condenser	-20ºF.	120°F.

Water temperature limits

	Minimum	Maximum
All models	40°F.	100°F.

Water pressure limits (potable)

	Maximum	Minimum
All models	20 psi	80 psi

Water pressure limit to water cooled condenser is 150 PSI

Voltage limits

	Minimum	Maximum
208-230 60 Hz	198	253

Minimum conductivity (RO water)

- 10 microSiemens / CM

Water Quality (ice making circuit)

- Potable

The quality of the water supplied to the ice machine will have an impact on the time between cleanings and ultimately on the life of the product. Water can contain impurities either in suspension or in solution. Suspended solids can be filtered out. In solution or dissolved solids cannot be filtered, they must be diluted or treated. Water filters are recommended to remove suspended solids. Some filters have treatment in them for dissolved solids.

Check with a water treatment service for a recommendation.

RO water. This machine can be supplied with Reverse Osmosis water, but the water conductivity must be no less than 10 microSiemens/cm.

Potential for Airborne Contamination

Installing an ice machine near a source of yeast or similar material can result in the need for more frequent sanitation cleanings due to the tendency of these materials to contaminate the machine.

Most water filters remove chlorine from the water supply to the machine which contributes to this situation. Testing has shown that using a filter that does not remove chlorine, such as the Scotsman Aqua Patrol, will greatly improve this situation.

Warranty Information

The warranty statement for this product is provided separately from this manual. Refer to it for applicable coverage. In general warranty covers defects in material or workmanship. It does not cover maintenance, corrections to installations, or situations when the machine is operated in circumstances that exceed the limitations printed above.

While the machine will operate satisfactorily within the air and water temperature limits, it will operate more efficiently when those temperatures are nearer the lower limits. Avoid locations that are hot, dusty, greasy or confined.

Options

Ice is made until it fills the bin enough to block an infrared light beam inside the base of the machine. A field installed kit is available to adjust the maintained ice level lower. The kit number is KVS.

The standard controller has excellent diagnostic capabilities and communicates to the user through the AutoAlert light panel, seen through the front panel. Field installed kits are available that can log data and provide additional information when the front panel is removed. That kit number is KSBU. A similar kit adds network connectivity, and its number is KSBU-N.

Bin compatibility

All models have the same footprint: 30 inches wide by 24 inches deep. Confirm available space when replacing a prior model.

Bin & adapter list:

- B330P - Does not fit
- B530P or B530S – Direct fit, no adapter needed
- B842S – KBT29
- B948S – KBT22B
- B1048S, BL1360S and BL1660S – upright bins include filler panels to accommodate a single 30” wide ice machine. No adapter is needed.

Dispenser compatibility

Only nugget ice models may be used with ice dispensers. Flaked ice is not dispensable.

See sales literature for other brand model ice and beverage dispenser applications.

Other Bins & Applications

Note the drop zone and ultrasonic sensor locations in the illustrations on the next pages.

Scotsman ice systems are designed and manufactured with the highest regard for safety and performance.

Scotsman assumes no liability of responsibility of any kind for products manufactured by Scotsman that have been altered in any way, including the use of any part and/or other components not specifically approved by Scotsman.

Scotsman reserves the right to make design changes and/or improvements at any time. Specifications and design are subject to change without notice.

Line Set

NRTE45 is a non-precharged tubing kit that contains a 45 foot 3/8” liquid line and a 45 foot 5/8” suction line. Tubes are supplied nitrogen charged and capped.

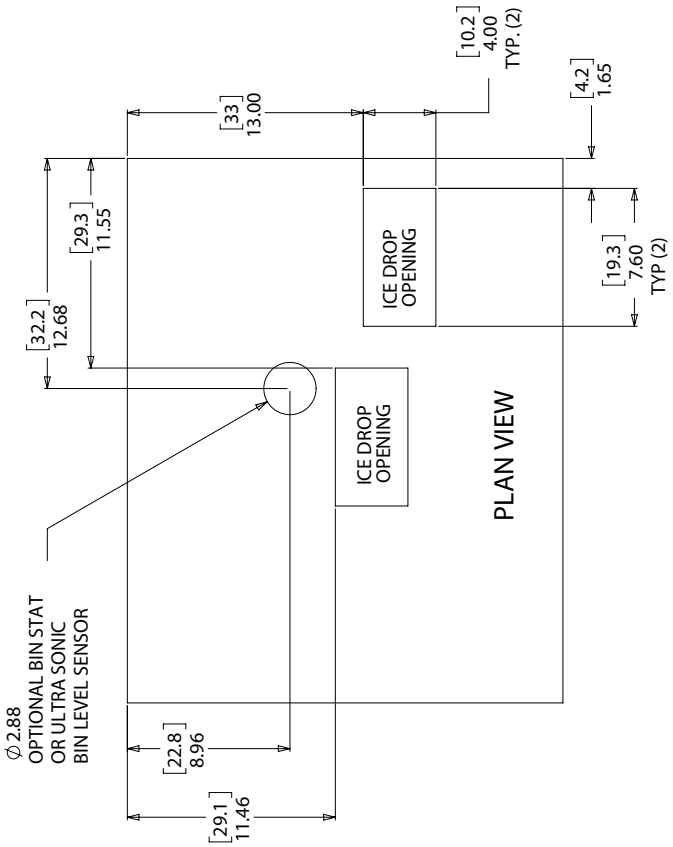
PLAN VIEW
ICE DROP OPENING
ICE DROP OPENING
[10.2] 4.00 TYP. (2)
[4.2] 1.65
[33] 13.00
[29.3] 11.55
[32.2] 12.68
[19.3] 7.60 TYP (2)
Ø 2.88 OPTIONAL BIN STAT OR ULTRA SONIC BIN LEVEL SENSOR
[22.8] 8.96
[29.1] 11.46

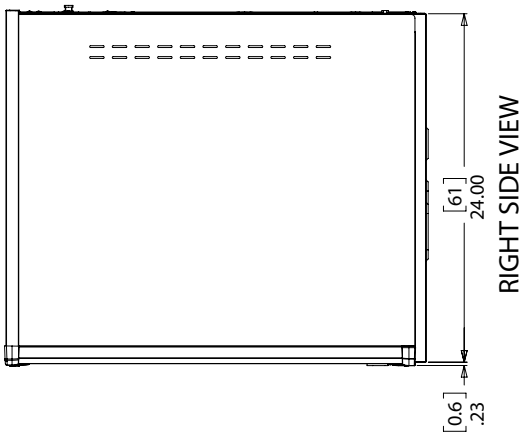
RIGHT SIDE VIEW
[61] 24.00
[0.6] .23

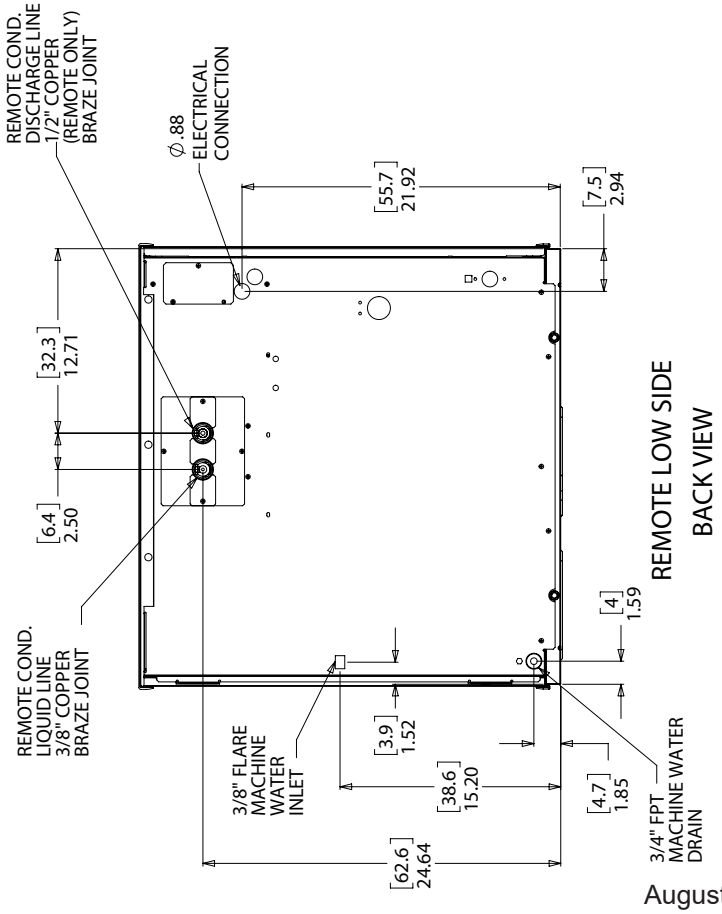
REMOTE LOW SIDE
BACK VIEW
REMOTE COND. DISCHARGE LINE 1/2" COPPER (REMOTE ONLY) BRAZE JOINT
Ø .88 ELECTRICAL CONNECTION
[55.7] 21.92
[7.5] 2.94
[32.3] 12.71
[6.4] 2.50
REMOTE COND. LIQUID LINE 3/8" COPPER BRAZE JOINT
[4] 1.59
3/8" FLARE MACHINE WATER INLET
[3.9] 1.52
[38.6] 15.20
[4.7] 1.85
3/4" FPT MACHINE WATER DRAIN
[62.6] 24.64

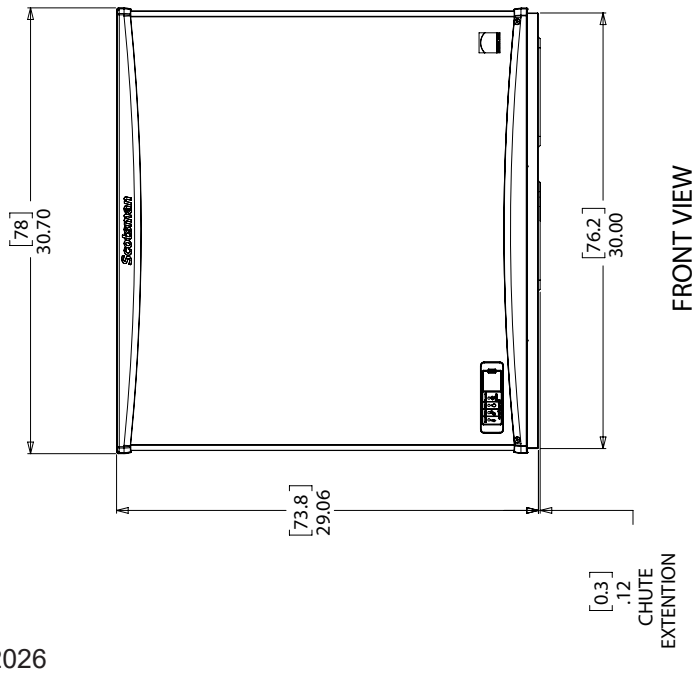
FRONT VIEW
[78] 30.70
[76.2] 30.00
[73.8] 29.06
[0.3] .12 CHUTE EXTENTION

Remove the carton from the skid. Check for hidden freight damage, notify the carrier immediately if any is found. Retain the carton for the carrier's inspection.

The machine is not bolted to the skid. If strapped remove the strap.

Place on Bin or Dispenser

If reusing an existing bin, be sure that the bin is in good shape and that the gasket tape on the top is not torn up. Water leaks, not covered by warranty, could result from a poor sealing surface. If installing a remote or a remote low side, a new bin is recommended due to the high cost to the user of replacing an old bin when a remote system is on top.

Install the correct adapter, following the directions supplied with that adapter.

Hoist the machine onto the adapter.

Note: The machine is heavy! Use of a mechanical lift is recommended.

Position the machine on the bin or adapter. Secure with straps from the hardware bag packed with the machine, or those supplied with the adapter.

Remove any plastic covering the stainless steel panels.

Remove any packaging, such as tape or foam blocks, that may be near the gear reducer or ice chute.

Level the bin and ice machine front to back and left to right by using the bin leg levelers.

Control Panel Door

The door can be moved to allow access to the on and off switches.

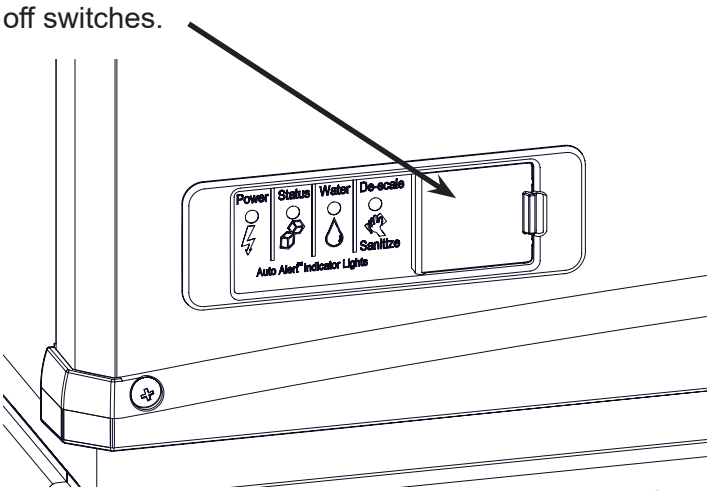

Panel Removal

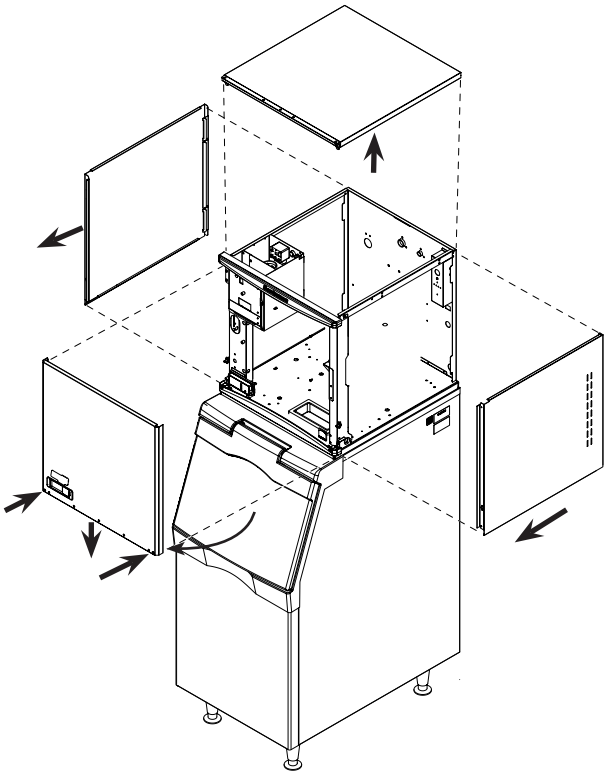

1. Locate and loosen the two screws at the bottom of the front panel.

2. Pull the front panel out at the bottom until it clears.

3. Lower the front panel down and off the machine.

4. Remove two screws at the front of the top panel. Lift up the front of the top panel, push the top panel back an inch, then lift to remove.

5. Locate and loosen the screw holding each side panel to the base. Left side panel also has a screw holding it to the control box.

6. Pull the side panel forward to release it from the back panel.

Water Supply

The water supply for ice making must be cold, potable water. There is a single 3/8” male flare potable water connection on the back panel. Water cooled models also have a 3/8” FPT inlet connection for the water cooled condenser. Chilled water can also be used for this connection.

Backflow

The design of the float valve and reservoir prevents potable water backflow by means of a 1" air gap between the reservoir's maximum water level and the float valve water inlet orifice.

Drain

There is one 3/4” FPT condensate drain fitting at the back of the cabinet. Water cooled models also have a 1/2” FPT discharge drain connection on the back panel.

Attach Tubing

Connect the potable water supply to the potable water fitting, 3/8” OD copper tubing or the equivalent is recommended.

Water filtration is recommended. If there is an existing filter, change the cartridge.

Drains - use rigid tubing: Connect the drain tube to the condensate drain fitting. Vent the drain.

Do not tee ice machine drains into the drain tube from the ice storage bin or dispenser. Back-ups could contaminate and / or melt the ice in the bin or dispenser. Be sure to vent the bin drain.

Follow all local and national codes for tubing, traps and air gaps.

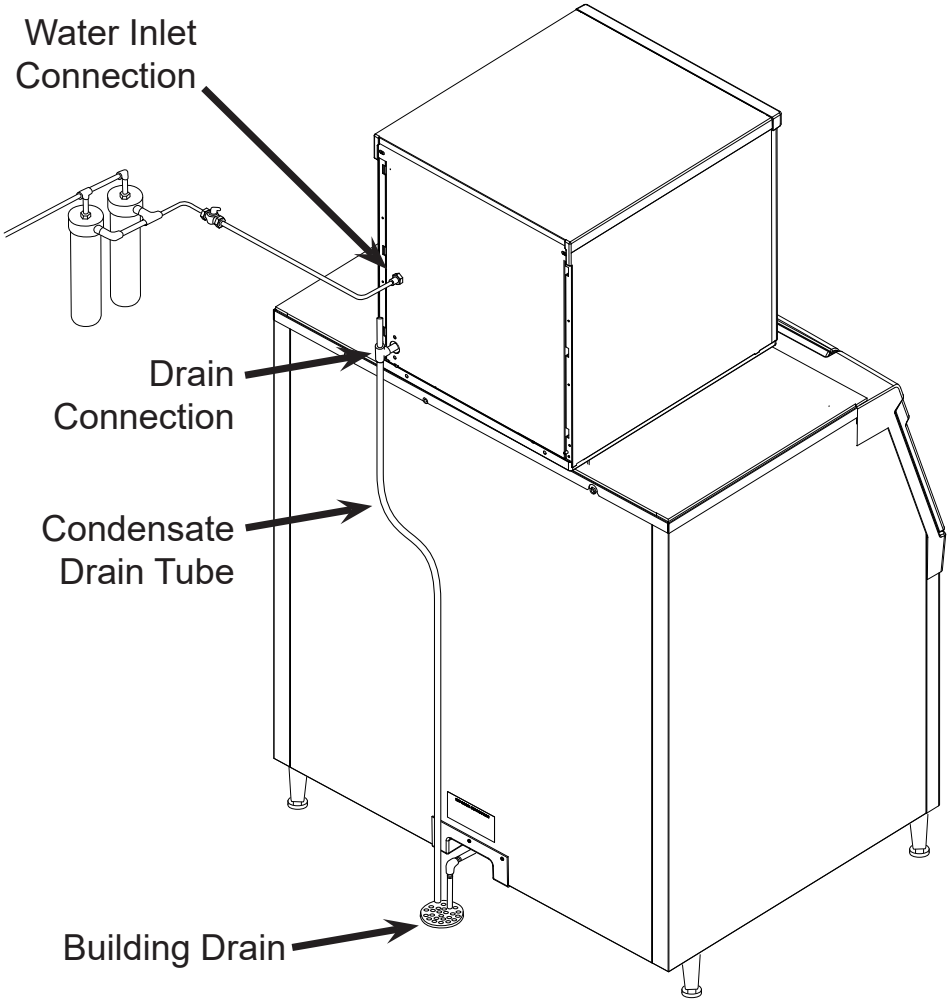

Electrical

The machine includes a power cord, connect to the proper power supply. A separate circuit is recommended to avoid unintended shut downs.

If a dedicated condensing unit is connected to this machine, it will have a separate power supply.

Do not use an extension cord.

Follow all local and national codes.

Model	Dimensions w" x d" x h"	Voltage Volts/Hz/Phase	Min Circuit Ampacity	Max Fuse Size (cord connected)
FS2330LX-32A	30 x 24 x 29	208-230/60/1	2.8	15

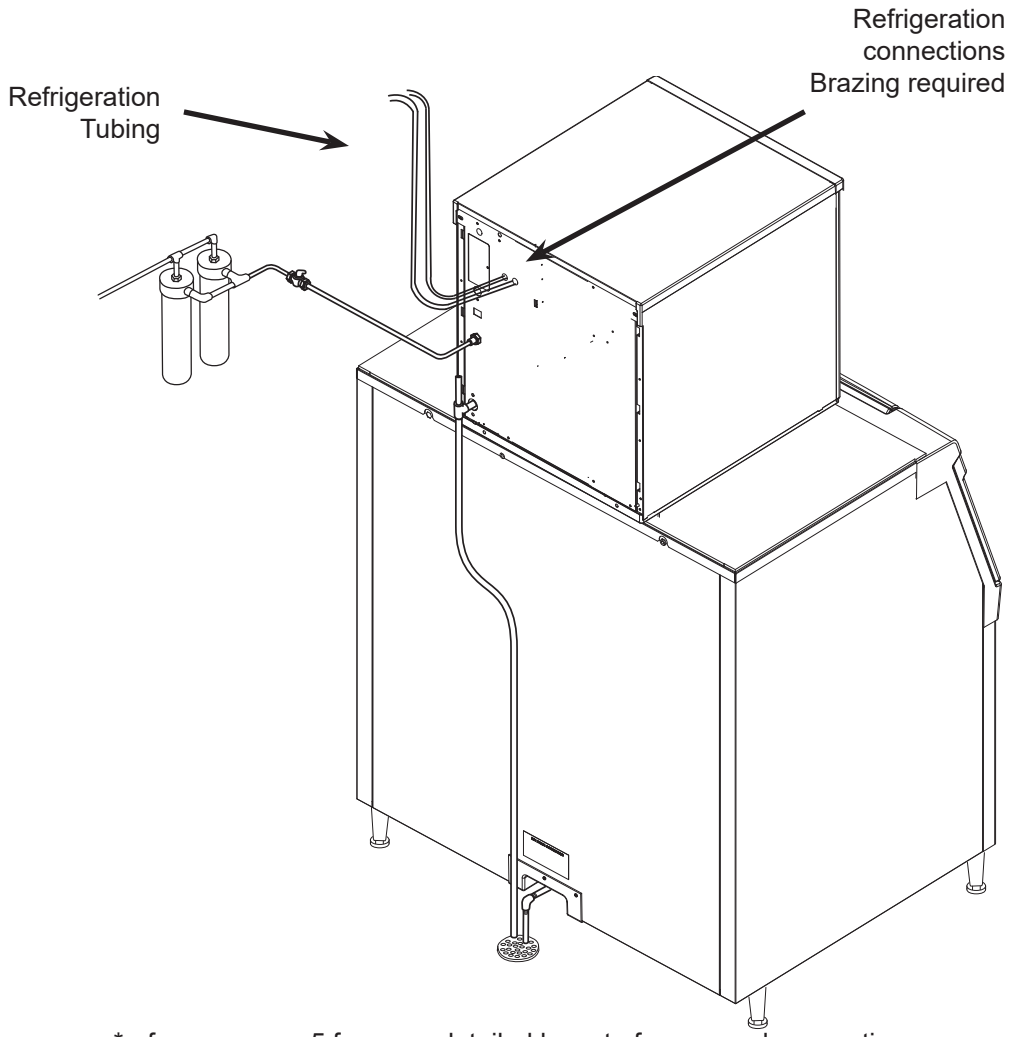

*reference page 5 for more detailed layout of rear panel connections

BTUH Capacity Requirements

Model	BTUH
FS2330LX-32A	12,000

Remote low side models require connection to a dedicated condensing unit or a rack system.

Recommended Tubing

- Suction Line: 5/8" OD
- Liquid Line: 3/8" OD

Distance limits

- Maximum distance between dedicated condensing unit and head: 75 feet.
- Maximum rise from the ice machine to the condenser is 35 physical feet

Note: Elevations greater than 20 feet require installation of a suction line trap at the 10 foot mark.

- Maximum drop from the ice machine to the condenser is 15 physical feet

Line Routing

- Do not route a line set that rises, then falls, then rises.
- Do not route a line set that falls, then rises, then falls.

Roof Attachment

Install and attach the remote condensing unit to the roof of the building, using the methods and practices of construction that conform to the local building codes, including having a roofing contractor secure the condenser to the roof.

Connections

The liquid and suction fittings on the back of the cabinet are stubs. The liquid line size is 3/8" OD. The suction line size is 5/8" OD.

1. On R-404A models recover the R404A holding charge
2. Cut the stubs off.
3. Braze line set tubing to each fitting. Sweep with dry nitrogen while brazing.
4. Dedicated condensing unit: Evacuate complete system to 50 microns.
5. Open the ball valves.

Rack: The skills of a refrigeration technician are required to connect the ice machine to the building's refrigeration system.

Notes:

- R-404A models: 10 ounces of R-404A refrigerant is in the system as a holding charge.
- Be sure the liquid connection is NOT in series with another liquid line valve.
- Local Codes must be observed.
- Note: All site made joints in HERMETICALLY SEALED SYSTEMS shall be tested for leaks at a pressure of at least 0.25 x maximum allowable pressure using detection equipment with a sensitivity of at least 3g/year of refrigerant.

After connections:

1. Wash out the bin. If desired, the interior of the bin could be sanitized.
2. Locate the ice scoop (if supplied) and have it available for use when needed.
3. Remote only: Switch on the electrical power to warm up the compressor. Do not start the machine for 4 hours.

Final Check List:

1. Is the unit located indoors in a controlled environment?
2. Has the correct electrical power been supplied to the machine?
3. Have all the water supply connections been made?
4. Have all the drain connections been made?
5. Has the unit been leveled?
6. Have all unpacking materials and tape been removed?
7. Has the protective covering on the exterior panels been removed?
8. Is the water pressure adequate?
9. Have the drain connections been checked for leaks?
10. Has the bin interior been wiped clean or sanitized?
11. Have any water filter cartridges been replaced?
12. Have all required kits and adapters been properly installed?
13. Has the ice machine been properly connected to the condensing unit or rack?

Control and Machine Operation

Once started, the ice machine will automatically make ice until the bin or dispenser is full of ice. When ice level drops, the ice machine will resume making ice.

Caution: Do not place anything on top of the ice machine, including the ice scoop. Debris and moisture from objects on top of the machine can work their way into the cabinet and cause serious damage. Damage caused by foreign material is not covered by warranty.

There are four indicator lights at the front of the machine that provide information on the condition of the machine: **Power, Status, Water, De-scale & Sanitize.**

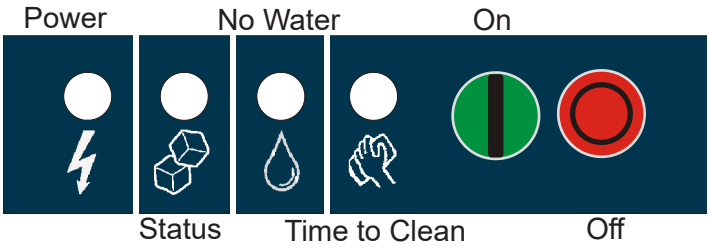

Note: If the De-Scale & Sanitize light is ON, following the cleaning process will clear the light for another cleaning time internal.

Two button switches are at the front – On and Off. To switch the machine OFF, push and release the Off button. The machine will shut off at the end of the next cycle. To switch the machine ON, push and release the On button. The machine will go through a start up process and then resume ice making.

Lower Light and Switch Panel

This user accessible panel provides important operational information and duplicates the lights and switches on the controller. It also allows access to the On and Off buttons that operate the ice machine.

Sometimes access to the switches should be limited to prevent unauthorized operation. For that purpose a fixed panel is shipped in the hardware package. The fixed panel cannot be opened.

To install the fixed panel:

1. Remove the front panel and remove the bezel.
2. Spread the bezel frame open and remove original door, insert fixed panel into bezel. Be sure it is in the closed position.
3. Return bezel to panel and install panel on unit.

Startup

1. Turn the water supply on. Remote models also open the liquid line valve.
2. Confirm voltage and switch on electrical power.
3. Push and release the On button. The machine will start in about two minutes.
4. The liquid line valve will open and liquid refrigerant will flow into the machine. For the units connected to a dedicated condensing unit, the resulting increase in suction pressure will start the condensing unit and the condensing unit will begin discharging warm air from the remote condenser. After about 5 minutes, ice will begin to drop into the bin or dispenser.
5. Check the machine for unusual rattles. Tighten any loose screws, be sure no wires are rubbing moving parts. Check for tubes that rub. Check brazed connections for leaks, retighten as needed.
6. Check suction pressure and adjust the EPR setting for optimum performance.

Note: As shipped the EPR valve should maintain low side pressure at about 36 PSIG + or - 2 PSIG.

7. Check superheat and if needed adjust to 12°F, + or - a few degrees

Note: Machines will operate and make ice at the factory EPR setting for optimum performance, adjust the EPR to the settings in the chart below:

Model Number	Ice Head EPR Setting	Superheat Setting
FS2330L	36 PSIG	12°F, + or - a few degrees

8. Scan the QR code found behind the front panel door and complete the warranty registration online or fill out and mail the included warranty registration card
9. Notify the user of the maintenance requirements and whom to call for service.

Maintenance Types

This ice machine needs five types of maintenance:

- Remote models need their condenser coils cleaned regularly.
- All models need scale removed from the water system.
- All models require regular sanitization.
- All models require sensor cleaning.
- All models require a top bearing check.

Maintenance Frequency

Remote air cooled condenser: At least twice a year, or every time the unit is cleaned

Scale removal. To maintain proper machine performance and sanitary condition, cleaning is recommended every 6 months. The ice machine will not maintain a sanitary condition without human intervention.
The yellow Descale & Sanitize light will switch on after a set period of 6 months as a reminder to clean the machine. Some water quality conditions may necessitate cleanings as frequently as every 3 months.

Sanitizing: Every time the scale is removed or as often as needed to maintain a sanitary unit.

Sensor Cleaning: Every time the scale is removed.

Top bearing check: At least twice a year or every time the scale is removed. During the course of normal operation, some material buildup on top of the bearing is normal and should be wiped away during maintenance.

Maintenance Specifics

Maintenance: Remote air cooled condenser

The condenser fins will occasionally need to be cleaned of leaves, grease or other dirt. Check the coil every time the ice machine is cleaned.

Maintenance: Exterior Panels

The front and side panels are durable stainless steel. Fingerprints, dust and grease will require cleaning with a good quality stainless steel cleaner

Note: If using a sanitizer or a cleaner that contains chlorine on the panels, after use be sure to wash the panels with clean water to remove chlorine residue.

Maintenance: Water filters

If the machine has been connected to water filters, check the cartridges for the date they were replaced or for the pressure on the gauge. Change cartridges if they've been installed more than 6 months or if the pressure drops too much during ice making.

Note: Following this procedure will reset the de-scale and sanitize light.

Preparing to Clean

1. Remove both the front and right panels.
2. Push and release the OFF button.
3. Remove ice from bin or dispenser.
4. Remove the ice chute covers.
5. Remove the water reservoir cover.
6. Turn the water supply to the float valve off by turning the knob 1/4 turn CCW.
7. Drain the water reservoir and evaporators into a bucket using the vent tube. Return the vent tube to it's original collar bracket.
8. Using a small cup for precise pouring, add hot (100-120°F) water into the reservoir until water comes out of the top of the evaporators at the extruders, about 2qts (varies slightly by model).
9. Let hot water warm evaporators for 2-5 minutes and then drain the system (refer to step 7).
10. Loosen the thumb screw and raise the water reservoir from the "Make Ice" position to the "Clean" position.

⚠WARNING	Ice machine scale remover contains acids. Acids can cause burns. If concentrated cleaner comes in contact with skin, flush with water. if swallowed, do NOT induce vomiting. Give large amounts of water or milk. Call Physician immediately. Keep out of the reach of children.
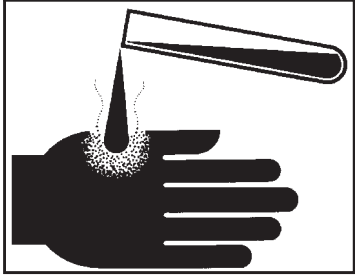	

Scale Removal

11. Prepare a solution of 32oz. Scotsman Clear One™ scale remover and 32oz. 95-115 °F. potable water.
12. Using a small cup for precise pouring, add the scale remover solution into the reservoir until the solution comes out of top of the evaporators at the extruders, about 2qts (varies slightly by model).
13. Push and release the Clean button: C is displayed and the Time to Clean light blinks. The augers will turn and circulate the scale remover for 30 minutes before shutting off. No ice is made during the cleaning cycle.
14. Lower the water reservoir back to the "Make Ice" position. Drain the water reservoir and evaporators into a bucket using the vent tube.
15. Perform a rinse of the system: turn the water supply to the float valve back on and allow the evaporators to fill. Once full, turn the water supply at the float valve off and drain the system using the vent tube. Return the vent tube to it's original collar bracket.

Sanitize

16. Create a solution of sanitizer. Mix 4oz/118ml of NuCalgon IMS and 2.5gal/9.5L of (90°F/32°C to 110°F/43°C) potable water to create a 200 ppm solution.
17. Pour the sanitizing solution into the reservoir.
18. Push and release the On button.
19. Switch the water supply to the ice machine on.
20. Operate the machine for 20 minutes.
21. Push and release the Off button.
22. Wash the reservoir cover and ice chute covers in the remaining sanitizing solution.
23. Return the reservoir cover and ice chute covers to their normal position.
24. Melt or discard all ice made during the sanitizing process.
25. Wash the inside of the ice storage bin with the sanitizing solution.
26. Push and release the On button.
27. Return the front panel to its original position and secure with the original screws

Photo Eyes

The control that senses bin full and empty is a photo-electric eye, therefore it must be kept clean so it can “see”. At least twice a year, remove the ice level sensors from the base of the ice chute, and wipe the inside clean, as illustrated.

1. Remove front panel.
2. Pull photo eye holders forward to release them.
3. Wipe clean as needed. Do not scratch the photo-eye portion.
4. Return the eye holders to their normal positions and return the front panel to its original position.

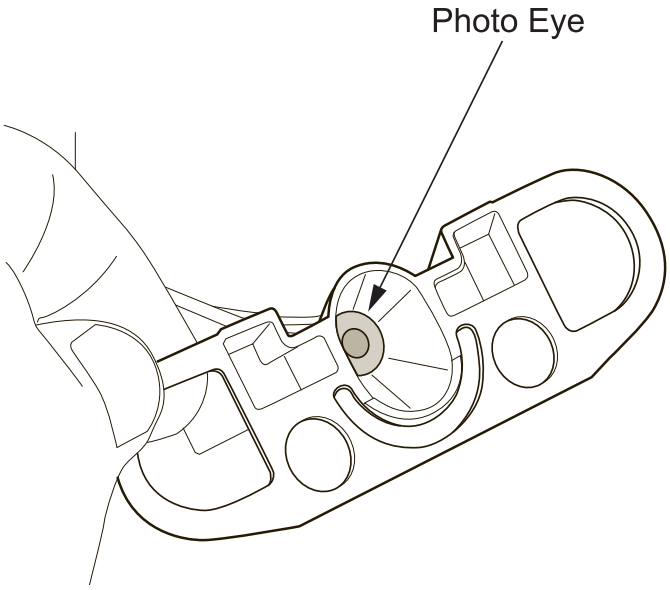

Note: Eye holders must be mounted properly. They snap into a centered position and are properly located when the wires are routed to the back and the left eye is the one with 2 wires at the connector.

Water Probe

The ice machine senses water by a probe located near the water reservoir. At least twice a year, the probe should be wiped clean of mineral build-up.

1. Shut off the water supply.
2. Remove front panel.
3. Remove the hose from the water sensor, use a hose clamp pliers for this.
4. Loosen mounting screw and release the water sensor from the frame of the unit.
5. Wipe probes clean.

Vari-Smart

Optional adjustable ice level control (KVS). When this option is present there is an adjustment post and an additional indicator light to the right of the four indicator lights mentioned earlier.

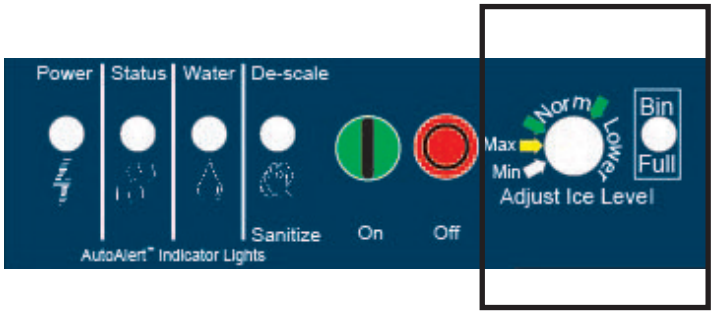

The ultrasonic ice level control allows the user to control the point that the ice machine will stop making ice before the bin or dispenser is full.

Reasons for this include:

- Seasonal changes in ice used
- Planning to sanitize the bin
- Faster turnover for fresher ice
- Certain dispenser applications where maximum ice level is not desired

Use of Adjustable Ice Level Control

There are several positions the ice level can be set to, including Off or Max (knob and label indicators lined up), where it fills the bin until the standard bin control shuts the machine off. See the kit's instructions for complete details including special instructions for dispenser applications.

Rotate the adjustment post to the desired ice level.

The machine will fill up to that level and when it shuts off the indicator light next to the adjustment post will be On.

Note: The maximum fill position is when the arrow on the knob points to the arrow on the label.

Normal Operation

Ice:

The machine will make either flaked or nugget ice, depending upon the model. The ice will be produced continuously until the bin is full. It is normal for a few drops of water to occasionally fall with the ice.

Heat:

On remote models most heat is exhausted at the remote condenser, the ice machine should not generate significant heat. Water cooled models also put most of the heat from ice making into the discharge water.

Noise:

The ice machine will make noise when it is in ice making mode. The compressor and gear reducer will produce sound. Air cooled models will add fan noise. Some ice making noise could also occur. These noises are all normal for this machine.

Reasons the machine might shut itself off:

• Lack of water.

• Does not make ice

• Auger motor overload

• High discharge pressure.

• Low refrigeration system pressure.

Check the following

1. Has the water supply to the ice machine or building been shut off? If yes, the ice machine will automatically restart within minutes after water begins to flow to it.

2. Has power been shut off to the ice machine? If yes, the ice machine will automatically restart when power is restored.

3. Has someone shut the power off to the remote condenser while the ice machine still had power? If yes, the ice machine may need to be manually reset.

To Manually Reset the machine.

• Open the switch door

• Push and release the Off button.

• Push and release the On button.

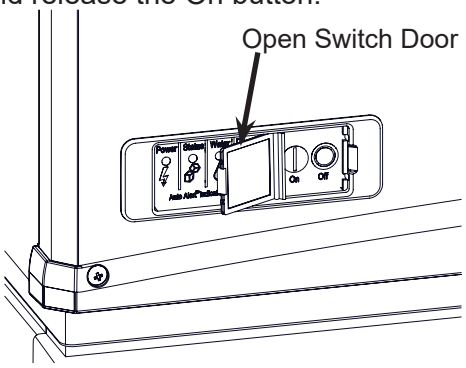

To Shut the Machine Off:

Push and hold the Off button for 3 seconds or until the machine stops.

	Indicator Lights & Their Meanings			
	Power	**Status**	**Water**	**De-Scale & Sanitize**
Steady Green	Normal	Normal	-	-
Blinking Green	Self Test Failure	Switching on or off. When Smart-Board used, machine attention recommended.	-	-
Blinking Red	-	Diagnostic shut down	Lack of water	-
Yellow	-	-	-	Time to descale and sanitize
Blinking Yellow	-	-	-	In Cleaning Mode
Light Off	No power	Switched to Off	Normal	Normal

SCOTSMAN ICE SYSTEMS

101 Corporate Woods Parkway

Vernon Hills, IL 60061

800-726-8762

www.scotsman-ice.com

17-3954-01 Rev.A